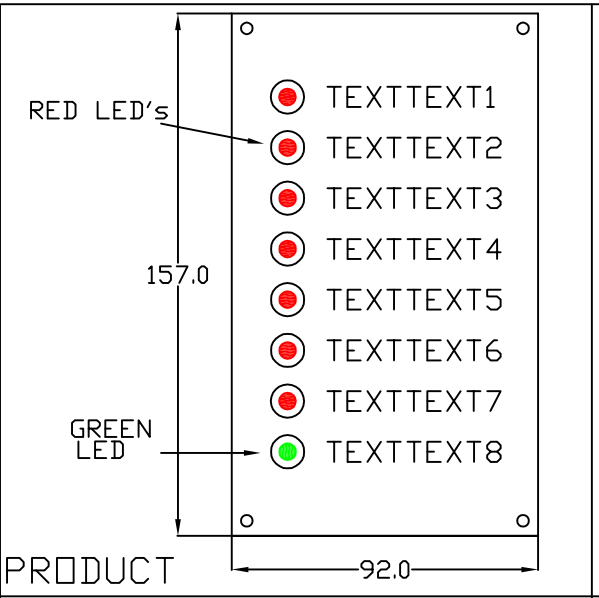

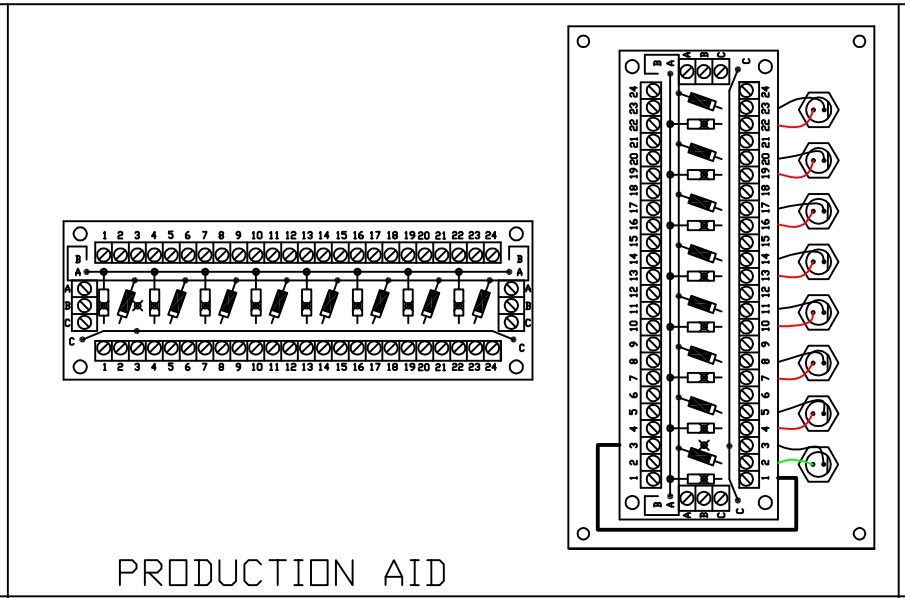

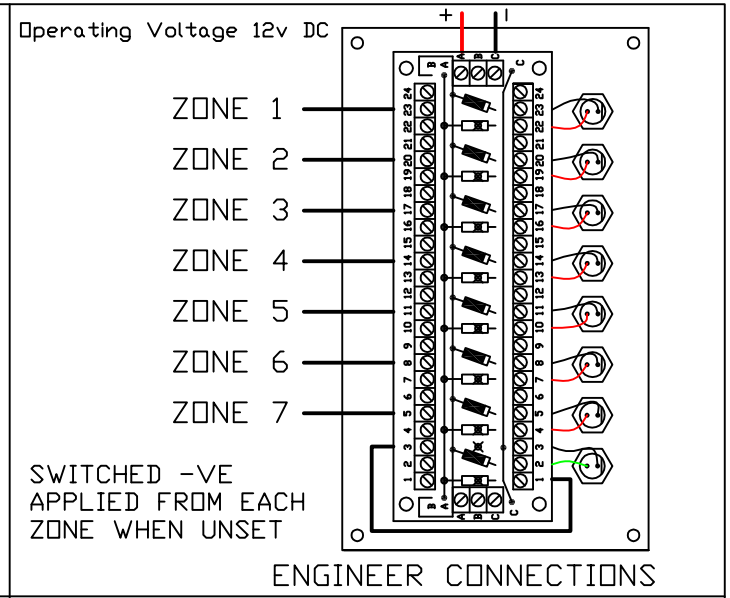

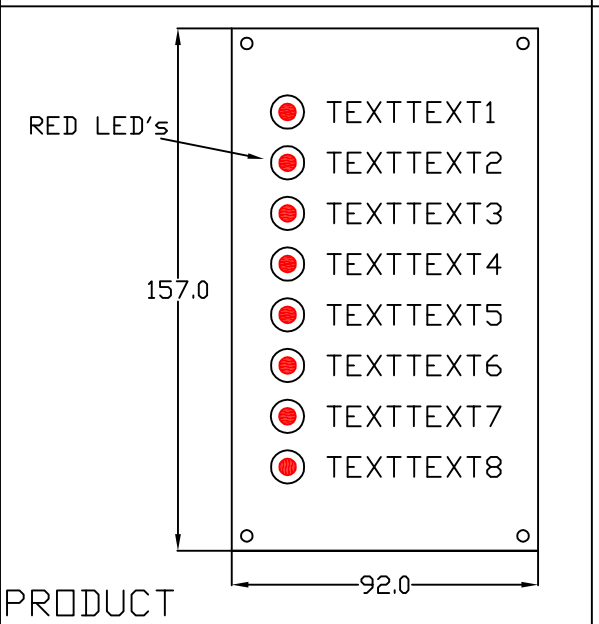

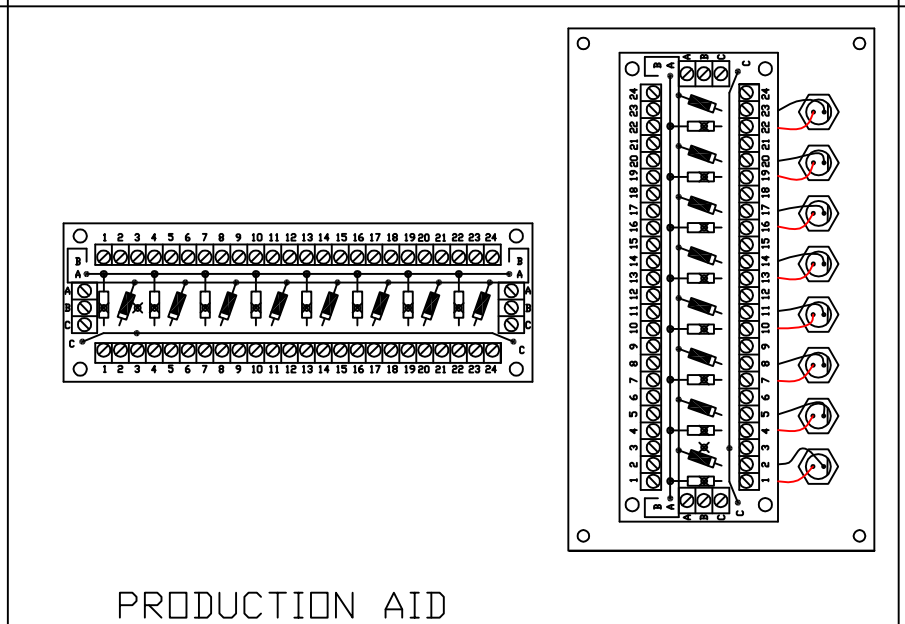

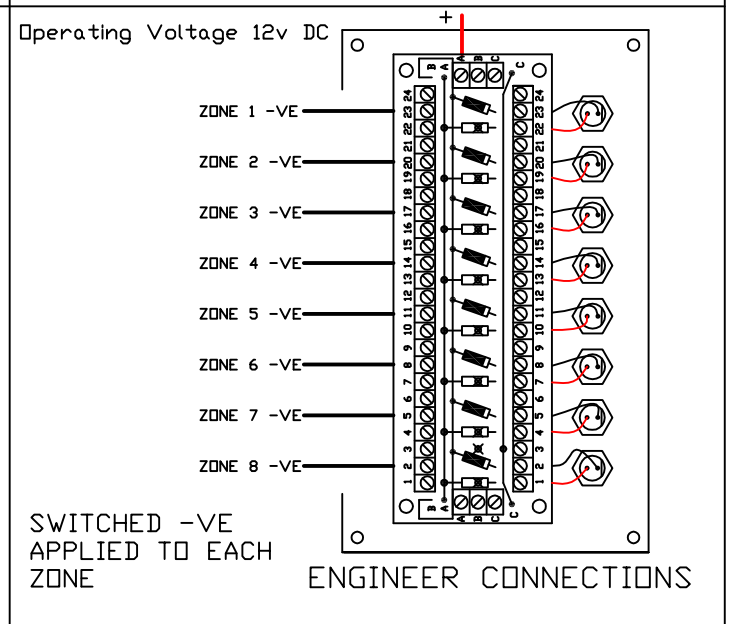

			Dimensions in mm	Hoyles Electronic Developments Ltd	DRAWN BY	S.BOYLE
			MATERIAL Alluminium	Copyright & Confidential	APPROVED	
				SPECIAL PROJECT		
			FINISH Matt	Indicator Unit	DWG No VQ750	SHT 1 OF 1
A	07.04.09	ORIG ISSUE				